tempLED RayBeam Pro HT V2 240 - 90 4000K

HALL LIGHT, HIGH TEMPERATURE LIGHT

Article number: 342494

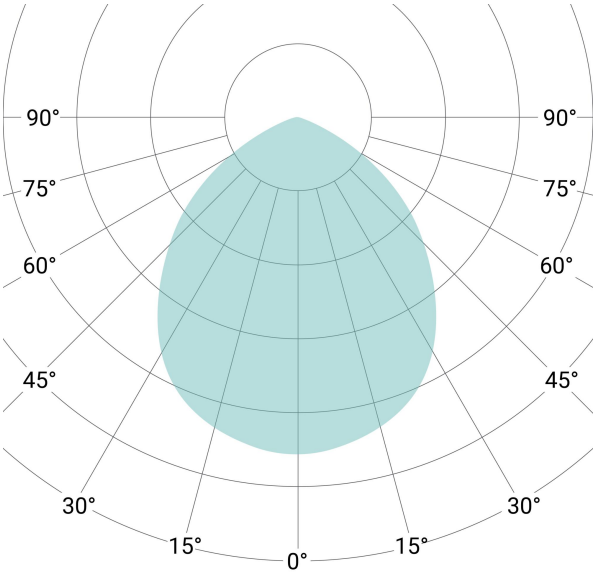

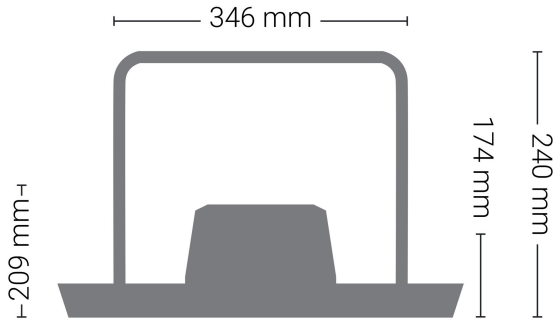

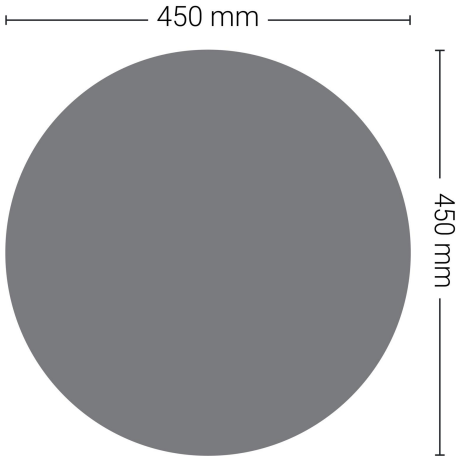

Lighting characteristics	
Initial, most similar color temperature	4,000 kelvin
Initial color rendering index	Ra > 80
Initial color consistency <	5 SDCM
Initial luminous flux	40,800 lumens
Luminous flux tolerance	10 percent
Initial system efficiency	170 lumens per watt
Beam angle	90 degrees
Light distribution	symmetrical
Light control system	optical system
Cover plate design	clear
Optical system design	standard optical system
Photobiological safety	IEC/TR 62778: 1
Compact flicker degree <	1 percent
Stroboscopic visuability measurement <	0.40
Short time flicker (Pst LM) <	0.40

Electrical characteristics	
Power supply AC	from 100 to 240 volts
Supply frequency	50/60 hertz
Power supply DC	from 127 to 250 volts
System performance	240 watts
System performance tolerance	10 percent
Power consumption	1.04 ampere
Maximum inrush current	24.00 ampere
Electrical protection class	I
Temperature classification according to ATEX	T5
Tc - temperature	89 degrees Celsius
Total harmonic distortion <	20 percent
Power factor >	0.93
Life span (L70B10C1) @ Ta 25 °C	100,000 hours
Life span [L70B10C1) @ Ta 80 °C	80,000 hours
Life span (L90B10C1) @ Ta 25 °C	50,000 hours
Product is suitable for emergency lighting (EL-mark)	yes
Limited surface temperatur (D-mark)	yes (internal powr supply)
Number of poles	3 grid | 2 DALI
Temperature monitoring	yes, in the power supply
Overheating protection	yes
Overvoltage protection	yes, integrated in power supply

Certificates	
ENEC certification	yes

Conformities	
CE conformity	yes
RoHS conformity	yes

Luminaire housing characteristics	
Ambient temperature	from -40 to 80 degrees Celsius
Ingress protection	IP 66
Impact resistance level	IK08
Pressure compensation membrane	yes
Luminaire is UV-resistant	yes
Luminaire housing material	die-cast aluminum
Heat sink material	die-cast aluminum
Bracket material	stainless steel
Cover plate material	thoughened safety glass
Optical system material	polycarbonate (PC)
Luminaire housing finish	powder coating
Bracket system finish	powder coating
Luminaire housing color	white aluminium (RAL9006)
Power supply housing color	water blue (RAL5021)
Bracket surface color	white aluminium (RAL9006)
Supply cable inlet	plug connector
Supply cable type	H05SS-F 5G1
Supply cable length	2,500 millimeters
Supply cable color	black

Mounting characteristics	
Standard mounting options	ceiling mounting bracket
Adjustment range of mounting bracket	from -45 to 45 degrees
Optional mounting options	wall bracket, crane mounting

Control characteristics	
Dimming / control	DALI-2
Minimum dimming level	10 percent
LEDelligence	LEDelligence ready

Logistical characteristics	
EAN/GTIN	4260745239684
Packaging unit	1 unit
Number of luminaires per package	1 unit
Scope of delievery	luminaire, ceiling bracket, fall protection
Net weight	9,500 gram
Gross weight per package	11,500 gram
Number of luminaires per pallet	28 unit
Diameter of the luminaire	450.00 millimeters
Height of the luminaire with bracket	261.00 millimeters
Height of the luminaire without bracket	145.00 millimeters
Luminaire box length	510.00 millimeters
Luminaire box width	510.00 millimeters
Luminaire box height	270.00 millimeters
Product availability	order item

Accessories for this product

Figure	Description	Item no.	EAN / GTIN
	wall bracket surface bracket for wall mounting, adjustment range of the luminaire: 0 to 90 degrees, material: stainless steel, finish: natural.	934258	4260745238823
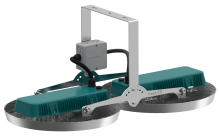	**double holder system, fixed** mounting bracket specially adapted to the luminaire series with a scale for fixed installation of two luminaires on one mounting point, adjustment range double bracket: -45 to +45 degrees in seven steps, single luminaire not adjustable, material: stainless steel, finish: natural, incl. cable box.	341904	
LEDelligence	**LEDelligence LOW BAY PIR motion detector** fully assembled in a box with an adapter for mounting on a light bracket, maximum mounting height: 3.50 meters, maximum detection range: 12 x 12 meters (at a mounting height of 3.50 meters), integrated light sensor with measuring range up to 1,000 lux for activation of the PIR motion detector, detection angle: 360 degrees, power supply via integrated mains adapter: 220 – 240 VAC, 50/60 Hz, ingress protection: IP 65, ambiant temperature range: -20 to +50 degrees Celsius. Programming and control via Bluetooth mesh network and app.	342908	
LEDelligence	**LEDelligence MID BAY PIR motion detector** fully assembled in a box with an adapter for mounting on a light bracket, maximum mounting height: 12 meters, maximum detection range: 12 x 12 meters (at a mounting height of 12 meters), integrated light sensor with measuring range up to 1,000 lux for activation of the PIR motion detector, detection angle: 360 degrees, power supply via integrated mains adapter: 220 – 240 VAC, 50/60 Hz, ingress protection: IP 65, ambiant temperature range: -20 to +50 degrees Celsius. Programming and control via Bluetooth mesh network and app.	342909	
LEDelligence	**LEDelligence HIGH BAY PIR motion detector** fully assembled in a box with an adapter for mounting on a light bracket, maximum mounting height: 17 meters, maximum detection range: 18 x 18 meters (at a mounting height of 17 meters), integrated light sensor with measuring range up to 1,000 lux for activation of the PIR motion detector, detection angle: 360 degrees, power supply via integrated mains adapter: 220 – 240 VAC, 50/60 Hz, ingress protection: IP 65, ambiant temperature range: -20 to +50 degrees Celsius. Programming and control via Bluetooth mesh network and app.	342910	
	emergency light module with automatic detection of failure and return of supply voltage, display of functional status, battery type: LiFePO4, running time approx. 3 hours with an output power of approx. 3,5 watts, recharging time: approx. 24 hours, can only be used at ambient temperatures from +5 to +50 degrees Celsius, power supply: 220 - 240 VAC, 50/60 Hz, mounted on the luminaire ready for use.	341901	4260745237253
	cover plate polycarbonate impact-resistant cover plate, thickness 5 mm, material: polycarbonat, finish: clear, delivery item without assembly.	333902	4260491843753

Accessories for this product

Figure	Description	Item no.	EAN / GTIN
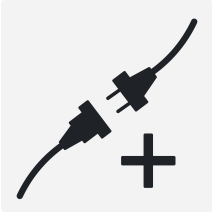	**High-Temperature Power Cable Extension** Extension of the 5-pin high-temperature supply cable to a length of up to 10 meters using a cable splice.	933566	4260745235570
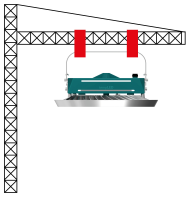	**crane mounting kit** with **two** attachment points, with rubber buffer shock-absorbing installation device for luminaire mounting on vibration-loaded crane systems, size: M10, material: stainless steel, finish: natural, delivery includes fall protection.	932810	4260491842114

Tender text

Initial, most similar color temperature: 4,000 kelvin; Initial color rendering index: Ra > 80 ; Initial color consistency <: 5 SDCM;
Initial luminous flux: 40,800 lumens; Luminous flux tolerance: 10 percent; Initial system efficiency: 170 lumens per watt;
Beam angle: 90 degrees; Light distribution: symmetrical ; Light control system: optical system ; Cover plate design: clear ;
Optical system design: standard optical system ; Photobiological safety: IEC/TR 62778: 1 ; Compact flicker degree <: 1 percent;
Stroboscopic visuability measurement <: 0.40 ; Short time flicker (Pst LM) <: 0.40 ; Power supply AC: from 100 to 240 volts;
Supply frequency: 50/60 hertz; Power supply DC: from 127 to 250 volts; System performance: 240 watts;
System performance tolerance: 10 percent; Power consumption: 1.04 ampere; Maximum inrush current: 24.00 ampere;
Electrical protection class: I ; Temperature classification according to ATEX: T5 ; Tc - temperature: 89 degrees Celsius;
Total harmonic distortion <: 20 percent; Power factor >: 0.93 ; Life span (L70B10C1) @ Ta 25 °C: 100,000 hours;
Life span [L70B10C1) @ Ta 80 °C: 80,000 hours; Life span (L90B10C1) @ Ta 25 °C: 50,000 hours;
Product is suitable for emergency lighting (EL-mark): yes ; Limited surface temperatur (D-mark): yes (internal powr supply) ;
Number of poles: 3 grid | 2 DALI ; Temperature monitoring: yes, in the power supply ; Overheating protection: yes ;
Overvoltage protection: yes, integrated in power supply ; ENEC certification: yes ; CE conformity: yes ; RoHS conformity: yes ;
Ambient temperature: from -40 to 80 degrees Celsius; Ingress protection: IP 66 ; Impact resistance level: IK08 ;
Pressure compensation membrane: yes ; Luminaire is UV-resistant: yes ; Luminaire housing material: die-cast aluminum ;
Heat sink material: die-cast aluminum ; Bracket material: stainless steel ; Cover plate material: thoughened safety glass ;
Optical system material: polycarbonate (PC) ; Luminaire housing finish: powder coating ; Bracket system finish: powder coating ;
Luminaire housing color: white aluminium (RAL9006) ; Power supply housing color: water blue (RAL5021) ;
Bracket surface color: white aluminium (RAL9006) ; Supply cable inlet: plug connector ; Supply cable type: H05SS-F 5G1 ;
Supply cable length: 2,500 millimeters; Supply cable color: black ; Standard mounting options: ceiling mounting bracket ;
Adjustment range of mounting bracket: from -45 to 45 degrees; Optional mounting options: wall bracket, crane mounting ;
Dimming / control: DALI-2 ; Minimum dimming level: 10 percent; LEDelligence: LEDelligence ready ; EAN/GTIN: 4260745239684 ;
Packaging unit: 1 unit; Number of luminaires per package: 1 unit; Scope of delievery: luminaire, ceiling bracket, fall protection ;
Net weight: 9,500 gram; Gross weight per package: 11,500 gram; Number of luminaires per pallet: 28 unit;
Diameter of the luminaire: 450.00 millimeters; Height of the luminaire with bracket: 261.00 millimeters;
Height of the luminaire without bracket: 145.00 millimeters; Luminaire box length: 510.00 millimeters;
Luminaire box width: 510.00 millimeters; Luminaire box height: 270.00 millimeters; Product availability: order item ;

Footnotes

Subject to changes and errors. Images are for illustrative purposes only.
Optional housing finishes: paint finishes according to the RAL colour chart, powder coatings according to the RAL colour chart, or synthetic resin coating.
Guarantee according to the warranty terms and conditions of tempLED GmbH; excluding accessories.