tempLED RayFlex V2 50 - 75x150 4000K

MULTIFUNCTION LIGHT

Article number: 842214

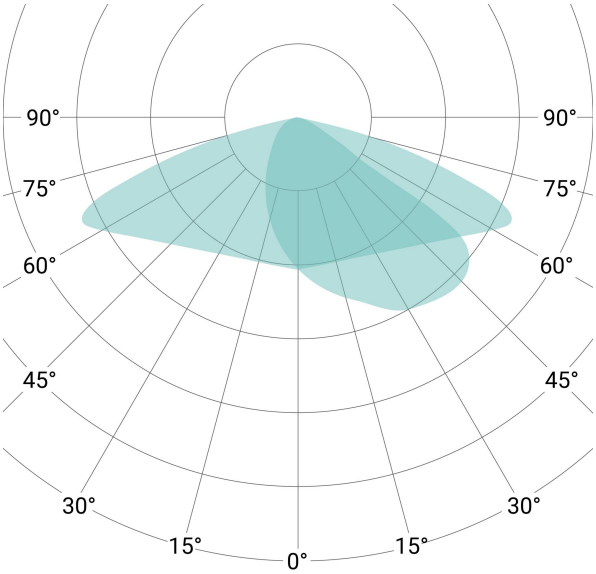

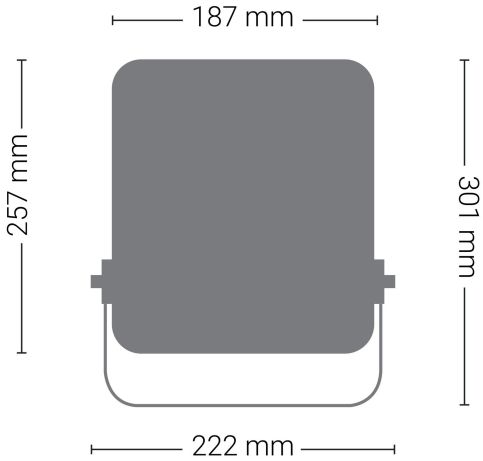

tempLED GmbH Kaiserreich Straße 4 | 83088 Kiefersfelden | info@tempLED.de | +49 8033 4954-710 https://templed.de/en/

Lighting characteristics	
Initial, most similar color temperature	4,000 kelvin
Initial color rendering index	Ra > 80
Initial color consistency <	5 SDCM
Initial luminous flux	7,750 lumens
Luminous flux tolerance	10 percent
Initial system efficiency	155 lumens per watt
Beam angle	75x150 degrees
Light distribution	asymmetrical
Light control system	optical system
Cover plate design	clear
Optical system design	standard optical system
Photobiological safety	IEC/TR 62778: 1
Compact flicker degree <	1 percent
Stroboscopic visuability measurement <	0.40
Short time flicker (Pst LM) <	0.40

Electrical characteristics	
Power supply AC	from 100 to 240 volts
Supply frequency	50/60 hertz
Power supply DC	from 150 to 250 volts
System performance	50 watts
System performance tolerance	10 percent
Power consumption	0.30 ampere
Maximum inrush current	70.00 ampere
Electrical protection class	I
Temperature classification according to ATEX	T5
Tc - temperature	90 degrees Celsius
Total harmonic distortion <	10 percent
Power factor >	0.90
Life span (L70B10C1) @ Ta 25 °C	100,000 hours
Life span (L90B10C1) @ Ta 25 °C	50,000 hours
Product is suitable for emergency lighting (EL-mark)	yes
Limited surface temperatur (D-mark)	yes (internal powr supply)
Number of poles	3 grid
Temperature monitoring	yes, in the power supply
Overheating protection	yes
Overvoltage protection	yes, integrated in power supply

Certificates	
ENEC certification	yes

Conformities	
CE conformity	yes
RoHS conformity	yes

Luminaire housing characteristics	
Ambient temperature	from -40 to 50 degrees Celsius
Ingress protection	IP 66
Impact resistance level	IK08
Pressure compensation membrane	yes
Luminaire is UV-resistant	yes
Luminaire housing material	die-cast aluminum
Heat sink material	die-cast aluminum
Bracket material	steel
Cover plate material	thoughened safety glass
Optical system material	polycarbonate (PC)
Luminaire housing finish	powder coating
Bracket system finish	powder coating
Luminaire housing color	white aluminium (RAL9006)
Power supply housing color	white aluminium (RAL9006)
Bracket surface color	white aluminium (RAL9006)
Supply cable inlet	cable gland
Supply cable type	H05RN-F 3G1
Supply cable length	1,000 millimeters
Supply cable color	black

Mounting characteristics	
Standard mounting options	mounting bracket
Adjustment range of mounting bracket	from -90 to 90 degrees

Control characteristics

Logistical characteristics	
EAN/GTIN	4262493351151
Packaging unit	1 unit
Number of luminaires per package	1 unit
Scope of delievery	luminaire, mounting eyelet
Net weight	2,300 gram
Gross weight per package	2,700 gram
Number of luminaires per pallet	216 unit
Width of the luminaire	222.00 millimeters
Height of the luminaire with bracket	301.00 millimeters
Height of the luminaire without bracket	257.00 millimeters
Depth of the luminaire	54.00 millimeters
Luminaire box length	325.00 millimeters
Luminaire box width	245.00 millimeters
Luminaire box height	108.00 millimeters
Product availability	stock item

Accessories for this product

Figure	Description	Item no.	EAN / GTIN
	DALI-2 dimming Retrofitting of the tempLED RayFlex V2 for DALI-2 dimming using an electrically isolated DALI-to-0-10V converter. Replacement of the supply cable from 3-pole to 5-pole. The converter is powered via the DALI bus.	842900	4262493351687
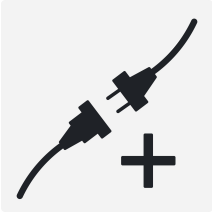	**Power Cable Extension** Extends the 3-pin power cord to a length of up to 10 meters using a cable connector.	333903	4260491843760
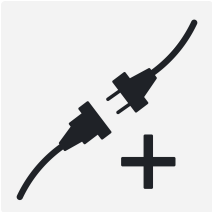	**Power Cable Extension** Extends the 5-pin power cable to a length of up to 10 meters using a cable splice.	933499	4260491849687

Tender text

Initial, most similar color temperature: 4,000 kelvin; Initial color rendering index: Ra > 80 ; Initial color consistency <: 5 SDCM;
Initial luminous flux: 7,750 lumens; Luminous flux tolerance: 10 percent; Initial system efficiency: 155 lumens per watt;
Beam angle: 75x150 degrees; Light distribution: asymmetrical ; Light control system: optical system ; Cover plate design: clear ;
Optical system design: standard optical system ; Photobiological safety: IEC/TR 62778: 1 ; Compact flicker degree <: 1 percent;
Stroboscopic visuability measurement <: 0.40 ; Short time flicker (Pst LM) <: 0.40 ; Power supply AC: from 100 to 240 volts;
Supply frequency: 50/60 hertz; Power supply DC: from 150 to 250 volts; System performance: 50 watts;
System performance tolerance: 10 percent; Power consumption: 0.30 ampere; Maximum inrush current: 70.00 ampere;
Electrical protection class: I ; Temperature classification according to ATEX: T5 ; Tc - temperature: 90 degrees Celsius;
Total harmonic distortion <: 10 percent; Power factor >: 0.90 ; Life span (L70B10C1) @ Ta 25 °C: 100,000 hours;
Life span (L90B10C1) @ Ta 25 °C: 50,000 hours; Product is suitable for emergency lighting (EL-mark): yes ;
Limited surface temperatur (D-mark): yes (internal powr supply) ; Number of poles: 3 grid ;
Temperature monitoring: yes, in the power supply ; Overheating protection: yes ;
Overvoltage protection: yes, integrated in power supply ; ENEC certification: yes ; CE conformity: yes ; RoHS conformity: yes ;
Ambient temperature: from -40 to 50 degrees Celsius; Ingress protection: IP 66 ; Impact resistance level: IK08 ;
Pressure compensation membrane: yes ; Luminaire is UV-resistant: yes ; Luminaire housing material: die-cast aluminum ;
Heat sink material: die-cast aluminum ; Bracket material: steel ; Cover plate material: thoughened safety glass ;
Optical system material: polycarbonate (PC) ; Luminaire housing finish: powder coating ; Bracket system finish: powder coating ;
Luminaire housing color: white aluminium (RAL9006) ; Power supply housing color: white aluminium (RAL9006) ;
Bracket surface color: white aluminium (RAL9006) ; Supply cable inlet: cable gland ; Supply cable type: H05RN-F 3G1 ;
Supply cable length: 1,000 millimeters; Supply cable color: black ; Standard mounting options: mounting bracket ;
Adjustment range of mounting bracket: from -90 to 90 degrees; EAN/GTIN: 4262493351151 ; Packaging unit: 1 unit;
Number of luminaires per package: 1 unit; Scope of delievery: luminaire, mounting eyelet ; Net weight: 2,300 gram;
Gross weight per package: 2,700 gram; Number of luminaires per pallet: 216 unit; Width of the luminaire: 222.00 millimeters;
Height of the luminaire with bracket: 301.00 millimeters; Height of the luminaire without bracket: 257.00 millimeters;
Depth of the luminaire: 54.00 millimeters; Luminaire box length: 325.00 millimeters; Luminaire box width: 245.00 millimeters;
Luminaire box height: 108.00 millimeters; Product availability: stock item ;

Footnotes

Subject to changes and errors. Images are for illustrative purposes only.
Optional housing finishes: paint finishes according to the RAL colour chart, powder coatings according to the RAL colour chart, or synthetic resin coating.
Guarantee according to the warranty terms and conditions of tempLED GmbH; excluding accessories.